Push-Pull
gear driven technology

inside door

TECHNICAL SPECIFICATIONS

Door Dimensions	Minimum: 6' W x 6'H Maximum: 18'W x 18'H
Operating Speed	Up to 96" per second open Up to 48" per second closing
Safety Features	Soft bottom edge design. Wireless reversing edge and built-in infrared sensor. No coil cords.
Door Panel	Reinforced PVC (27 oz/sq.yd). Available in different colors and provided with side sealing zippers; soft bottom edge design.
Door Components	Direct Drive Unit. Side frames made of structural channels of 3 1/8" x 1 5/8" x 1/8" in stainless steel. Inner side guides in Polyethylene (PE-UHMW 1000); outer section 7/8" x 1 9/16", on springs. Stainless steel side guide covers are included.

TECHNICAL SPECIFICATIONS

Control and Drive System	IP65 rated direct drive unit utilizes soft start/stop technology. UL approved control system housed in NEMA 4/12 enclosure. DYNALOGIX II controller with variable frequency drive and high resolution encoder. Power: 1 HP for a door surface up to 25 sq.yds; 2 HP (larger surface). Voltage: Standard single phase 208-230 VAC, three phase 208-230 VAC, three phase 460VAC. Optional three phase 575VAC. Frequency: 50-60Hz. Fuses provided by the customer: 10A for a motor of 1HP and 16A for 2 HP.
Pressure Resistance	Applications to 324 ft2 resist static pressure of 9.29lbs/sq.ft., equivalent to wind at 60mph. Smaller doors have greater pressure resistance.
Warranty	DYNACO M2 Stainless steel doors include an industry leading 5 year limited cycle warranty on the drive motor and 5 years on manufacturers defects. One year on balance of components.

Side guide and M2 drive zipper

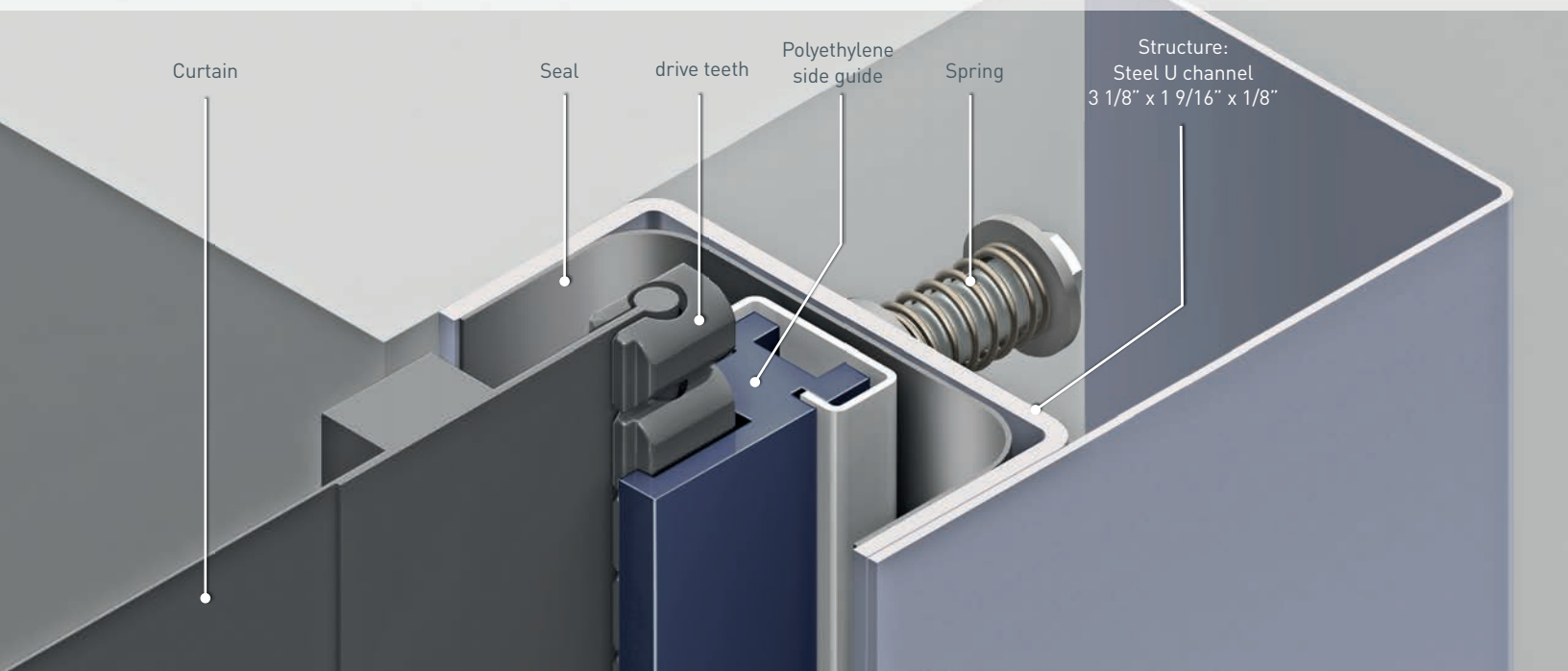

Dimensions and installation requirements
DYNACO STAINLESS STEEL M2 HIGH PERFORMANCE DOOR

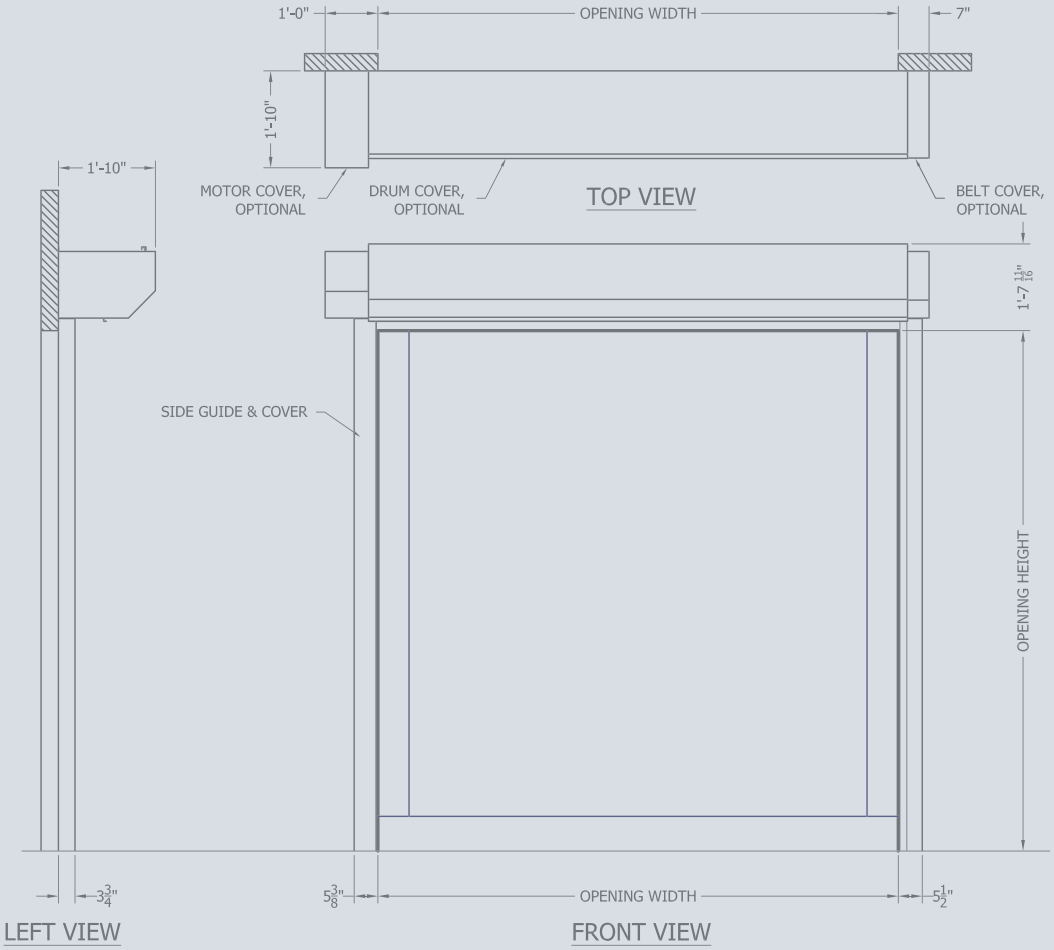

All indicated dimensions are net: the space necessary for mounting and maintenance has to be provided.
REMARK: based on the risk analysis of the environment, extra push buttons, detectors and covers might be required.

935 Campus Drive Mundelein IL 60060
P: 1-800-459-1930
P: 1-847-562-4910
F: 1-800-459-1960
Email: dynaco@dynacodoor.us
www.dynacodoor.us